END COVER COLOR: BLACK

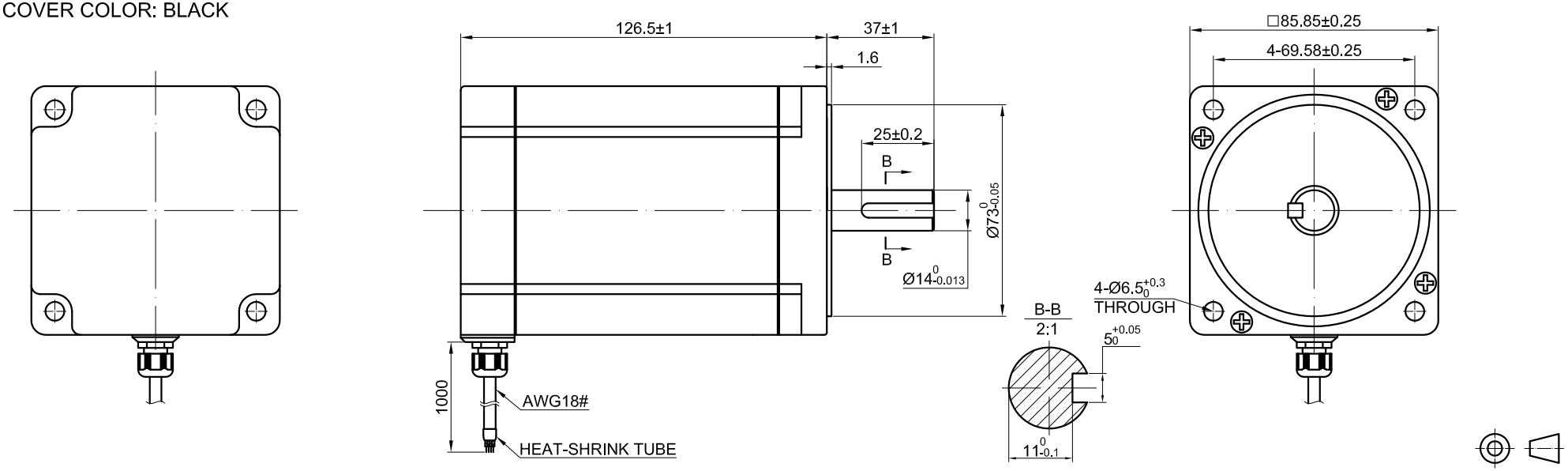

SPECIFICATION / CONNECTION	BIPOLAR
AMPS/PHASE	6.00
RESISTANCE/PHASE(Ohms)@20°C	0.55±10%
INDUCTANCE/PHASE(mH)@1KHz	5.00±20%
HOLDING TORQUE(Nm)[lb-in]	8.50 [75.29]
STEP ANGLE(°)	1.8±0.09
MAXIMUM RADIAL RUNOUT(mm)@LOAD 450g	0.025
MAXIMUM AXIAL RUNOUT(mm)@LOAD 920g	0.075
ROTOR INERTIA(g-cm²)	3600
WATERPROOF GRADE	IP65
WEIGHT(Kg)[lb]	—
TEMPERATURE RISE:MAX.80°C（MOTOR STANDSTILL;FOR 2PHASE ENERGIZED）	
OPERATION AMBIENT TEMPERATURE 0°C~50°C[32°F~122°F]	
INSULATION RESISTANCE 100 Mohm（UNDER NORMAL TEMPERATURE AND HUMIDITY）	
INSULATION CLASS B 130°C[266°F]	
DIELECTRIC STRENGTH 500VAC FOR 1MIN.(BETWEEN THE MOTOR COILS AND THE MOTOR CASE)	

TYPE OF CONNECTION (EXTERN)		MOTOR	
PIN NO	BIPOLAR	LEADS	WINDING
1	A —	BLK	A
2	A\ —	GRN	A\
3	B —	RED	B
4	B\ —	BLU	B\

FULL STEP 2 PHASE-Ex. ,
WHEN FACING MOUNTING END (X)

STEP	A	B	A\	B\	CCW	
1	+	+	-	-	↓	↑
2	-	+	+	-		
3	-	-	+	+		
4	+	-	-	+		CW

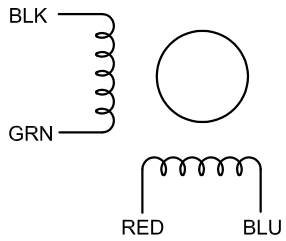

SKYSMotor

	APVD		7.12.2019
	CHKD		
1:2	DRN		
SCALE	SIGNATURE		DATE

STEPPER MOTOR

34IP65-85